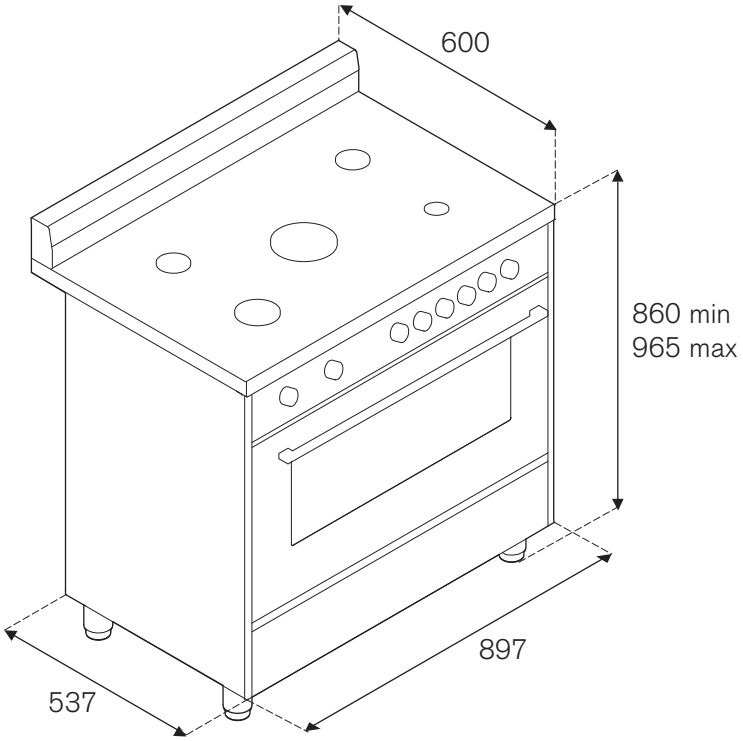

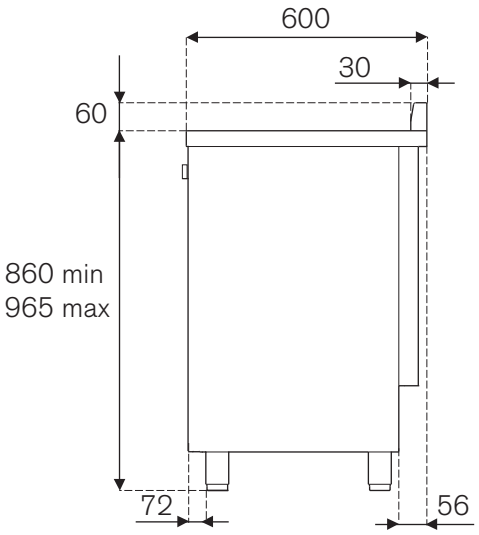

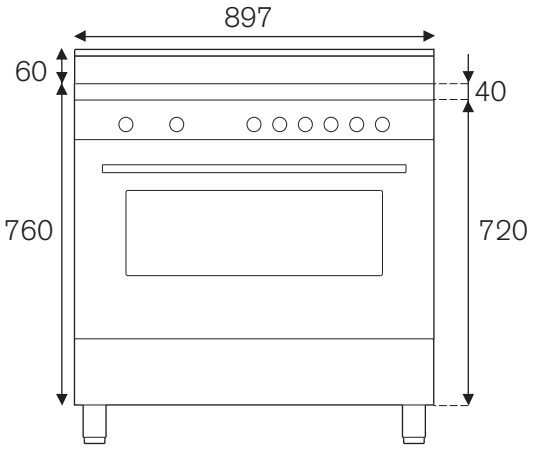

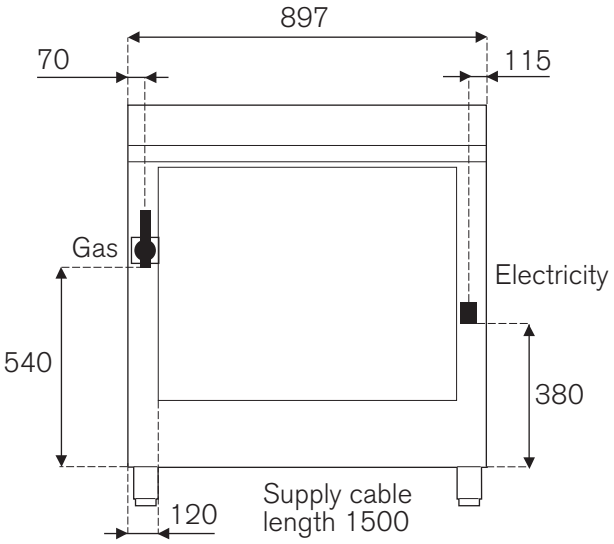

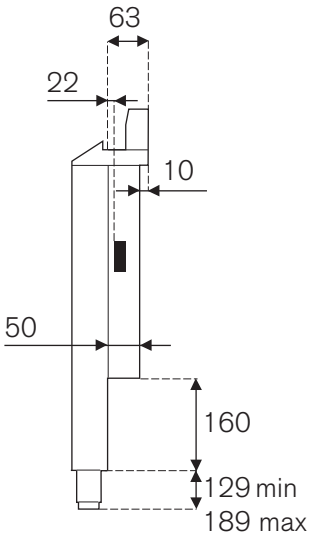

D079 C90S0SQ